edesa

MULTI-FUNCTION **OVENS**

EOE-7050 FWH

Cod. **921270259** EAN **8422248110723**

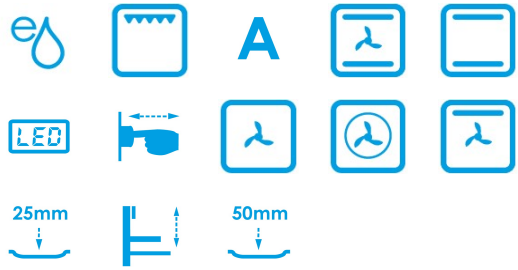

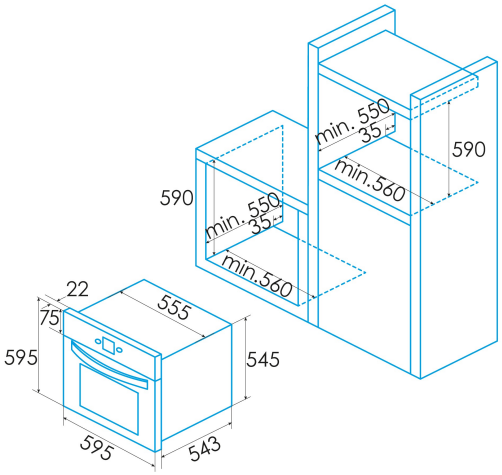

GENERAL INFORMATION

EAN/UPC	8422248110723
Subfamily	Multifunction

Product sheet

Number of cavities	1
Cavity volume (L)	80

Characteristics

Cleaning	Aquasmart
Removable inner glass	√
Cavity type	Flat
Side racks	√

Accessories

Flat tray	√
Deep tray	-
Steam tray	-
Grill	√
Inner grill	√
Telescopic guides	-
Tray handle	-
Removable tank	-
Pizza stone	-
Roast kit	-