edesa

WASHING **MACHINES**



EWF-9401 WH

Cod. **925270566** EAN **8422248359344**



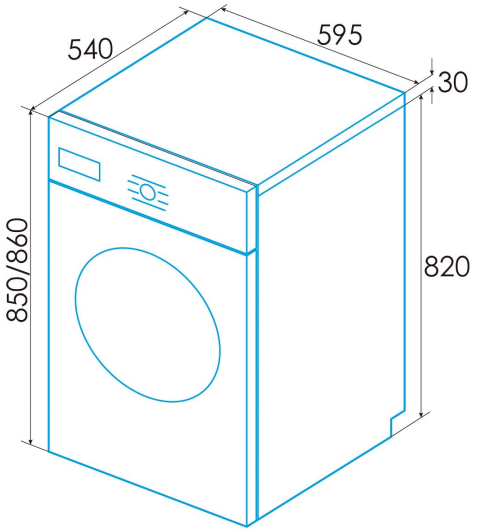

GENERAL INFORMATION

EAN/UPC	8422248359344
Subfamily	Washing Machine

Product sheet

Assigned capacity [kg]	9
Energy efficiency class	A
Airborne acoustic noise emissions during spinning [dB(A)]	72
Installation type	Free Standing

Control

Control type	Knob + Touch Control
Display	LED
Wash temperature selector	√
Spin speed selector	√
Start delay	1-24h
Remaining time indicator	√
Start/Pause	√

Programming

Number of programmes	16
Programme 1 - Name	Cotton
Programme 2 - Name	Sintetic
Programme 3 - Name	ECO
Programme 4 - Name	20°C
Programme 5 - Name	Wool
Programme 6 - Name	Quick
Programme 7 - Name	Mix
Programme 8 - Name	Baby clothes
Programme 9 - Name	Customized
Programme 10 - Name	Jeans
Programme 11 - Name	STEAM
Programme 12 - Name	ANTI-ALLERGY
Programme 13 - Name	DOWN-DUVET
Programme 14 - Name	DRUM CLEAN
Pre-wash function	√
Extra rinse function	√
Add clothes function	√

General features

Loading	Front Loading
Drum type	Stainless Steel
Filter	Accessible
Load self-adjustment	√
Child lock	√
Overflow protection	√

Power connection

Nominal voltage (V)	220-240
Nominal frequency (Hz)	50
Nominal input power (W)	1950
Plug type	Type F

Installation

Width (mm)	595
Min. height (mm)	850
Max. height (mm)	860
Depth (mm)	540
Adjustable height	√