edesa

TELESCOPIC EXTRACTOR **HOODS**



ECT-6411 X

Cod. **932271920** EAN **8435436112577**

LED A

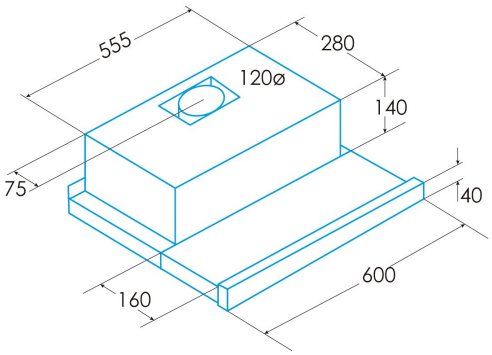

GENERAL INFORMATION

EAN/UPC	8435436112577
Subfamily	Telescopic

Product sheet according to directives EU65/2014 - EN61591, EN60704-2-13, EN50564

AEC (Annual energy consumption) (kWh/year)	44,5
EEI class (energy efficiency class)	C
FDE (fluid dynamic efficiency)	11,9
FDE class (fluid dynamic efficiency class)	E
LE (light efficiency) (lux/W)	36
LE class (light efficiency class)	A
GFE (grease filtering efficiency)	68
GFE class (grease filtering efficiency class)	D
Airflow in normal mode MIN (m3/h)	150
Airflow in normal mode MAX (m3/h)	390
Acoustic power in normal mode MIN (dB)	45,5
Acoustic power in normal mode MAX (dB)	57
Po (energy consumption in off mode) (W)	0
Ps (energy consumption in standby mode) (W)	0

Integration directive EU 66/2014

f (time increase factor)	1,6
EEI (Energy Efficiency Index)	78,2
QBEP (maximum efficiency at air flow point) (m3/h)	198,2
PBEP (maximum efficiency at pressure point) (Pa)	148
WBEP (power consumption at maximum efficiency) (W)	68,6
WL (nominal power lighting system) (W)	7
EMIDDLE (Average illuminance on the cooking surface) (lux)	252

External Dimensions

Width (mm)	600
Depth (mm)	280
Maximum total height (mm)	180
Minimum total height (mm)	180
Diamètre de sortie (mm)	120

Characteristics

Motor quantity	1
Motor model	TF2003
Maximum pressure (Pa)	194
Filter technology	Aluminium mesh
Control technology	Mechanical push button
Booster	-
Power levels	2
Timer	-
Filter saturation indicator	-
Charcoal filter replacement indicator	-
Dimmer function	-
Connectivity	-
Remote control	-
Display	-

Lighting

Light model	ECOLED
Ray technology	LED

Installation

Minimum distance to electric plate (mm)	550
Minimum distance to gas plate (mm)	650
Recirculation option	√
Charcoal filter	-
Back draught shutter	Included
Inner shield	-

Electric connection

Nominal voltage (V)	220-240
Nominal frequency (Hz)	50/60

Nominal input power (W)	107
Electric shock protection	Class I
Power cord length (m)	1,5
Plug type	No plug

Accessories

Upper decorative duct extension	No
White decorative duct	No
Black decorative duct	No
Island tube booster	No
Back draught shutter	Included
MAX PRO Metal filter	No
Activated charcoal filter	2825263
Noiseless flexible duct	No
Recirculation kit	No