edesa

DECORATIVE **CEILING**

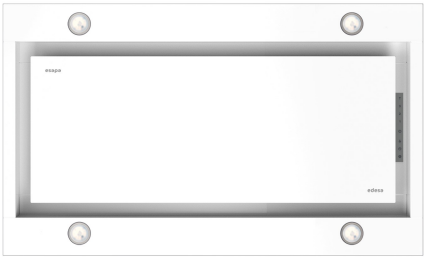

ECC 1832 WH

Cod. **932271943** EAN **8435436112379**

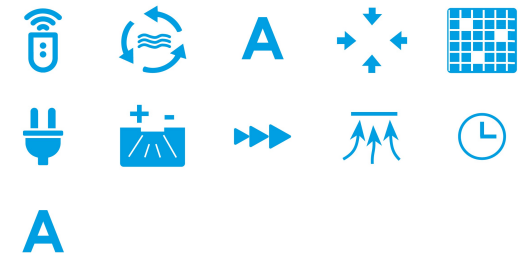

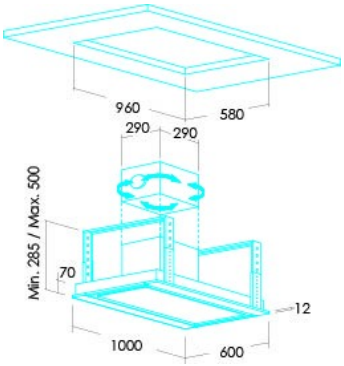

GENERAL INFORMATION

EAN/UPC	8435436112379
Subfamily	Ceiling

Product sheet according to directives EU65/2014 - EN61591, EN60704-2-13, EN50564

AEC (Annual energy consumption) (kWh/year)	58,9
EEI class (energy efficiency class)	A
FDE (fluid dynamic efficiency)	31,5
FDE class (fluid dynamic efficiency class)	A
LE (light efficiency) (lux/W)	36,6
LE class (light efficiency class)	A
GFE (grease filtering efficiency)	91,2
GFE class (grease filtering efficiency class)	B
Airflow in normal mode MIN (m3/h)	340
Airflow in normal mode MAX (m3/h)	600
Airflow in boost mode MIN (m3/h)	850
Acoustic power in normal mode MIN (dB)	50
Acoustic power in normal mode MAX (dB)	65
Acoustic power boost mode (dB)	67
Po (energy consumption in off mode) (W)	0,3
Ps (energy consumption in standby mode) (W)	0,3

Integration directive EU 66/2014

f (time increase factor)	0,9
QBEP (maximum efficiency at air flow point) (m3/h)	350,4
PBEP (maximum efficiency at pressure point) (Pa)	380
WBEP (power consumption at maximum efficiency) (W)	132,8
WL (nominal power lighting system) (W)	14
EMIDDLE (Average illuminance on the cooking surface) (lux)	513

External Dimensions

Width (mm)	1000
Depth (mm)	600
Maximum total height (mm)	500
Minimum total height (mm)	285
Diamètre de sortie (mm)	150

Characteristics

Motor quantity	1
Motor model	BT3
Maximum pressure (Pa)	470
Filter technology	Aluminium mesh
Control technology	Electronic Touch Control
Booster	√
Power levels	4
Filter saturation indicator	√
Charcoal filter replacement indicator	-
Dimmer function	-
Connectivity	No
Remote control	√
Display	Display

Lighting

Light model	ECOLED
Ray technology	LED

Installation

Minimum distance to electric plate (mm)	550
Minimum distance to gas plate (mm)	650
Recirculation option	-
Charcoal filter	√
Back draught shutter	No
Inner shield	-

Electric connection

Nominal voltage (V)	220-240
Nominal frequency (Hz)	50

Nominal input power (W)	294
Electric shock protection	Class II

Accessories

Back draught shutter	02832006
MAX PRO Metal filter	02800917
Activated charcoal filter	02859398
Noiseless flexible duct	02893002